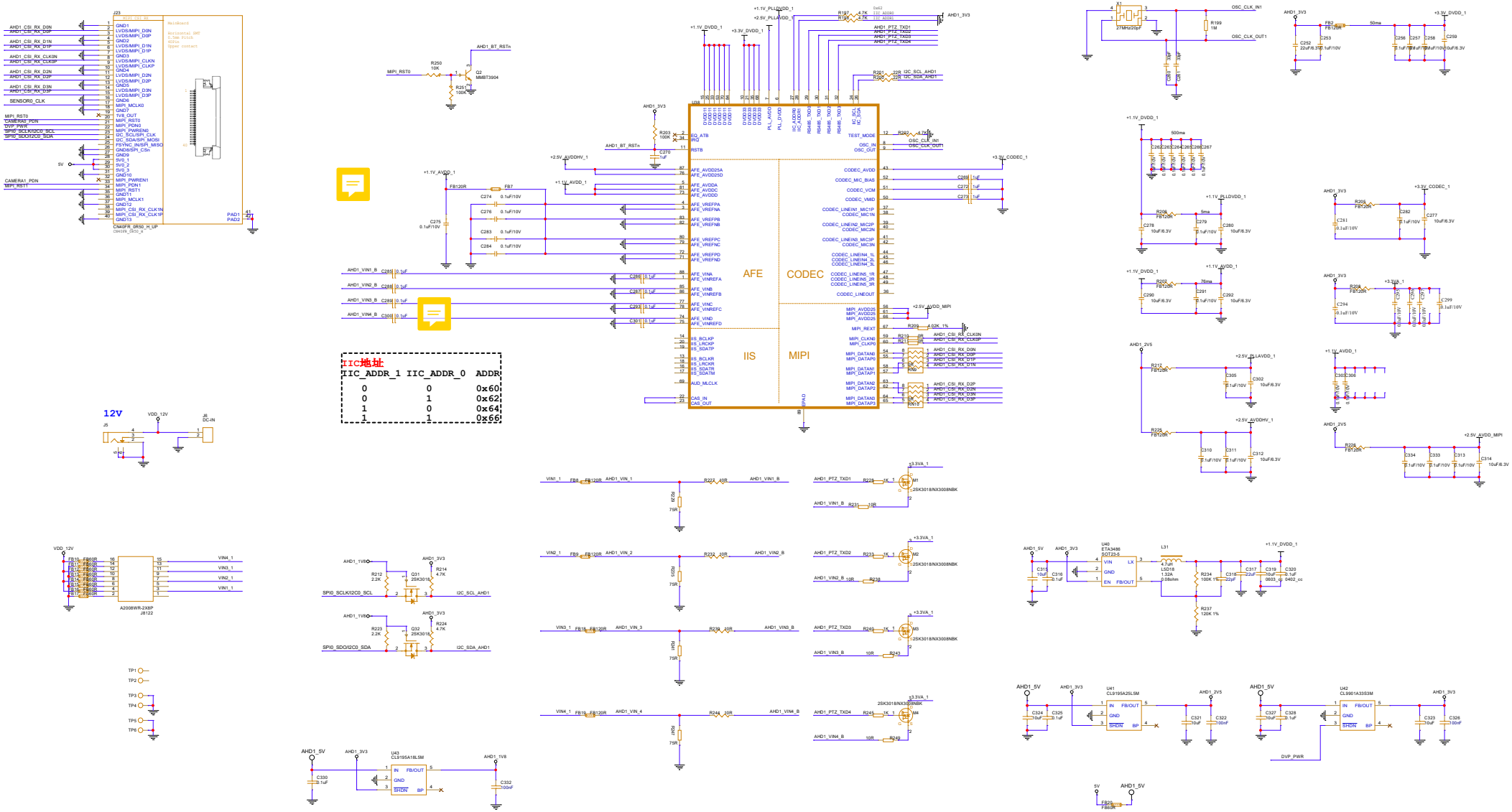

Shen Zhen RP ELECTRONICS CO.,LTD	
Title: LCD Board Schematics (TEL +86 755 23036780)	
Size: D	Document Number: LCD	Rev: 1.0
Date: Tuesday, May 21, 2024	Sheet 2 of 11